DNH AS
N-3770 Kragerø
NORWAY

HS-15 EExmN(T)

Morrison's Public Address
Phone: 0407 44 2822
Fax: 08 94931196
Email: sales@morrisonsav.com
Web: morrisonsav.com

ISO 9001 CERTIFIED

Bracket and all outside nuts and screws in stainless steel.

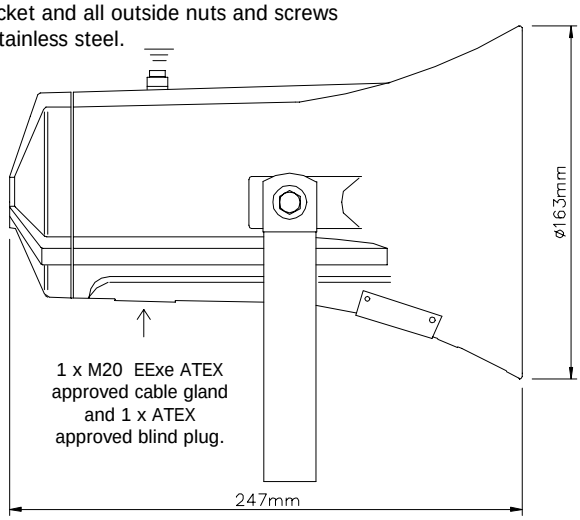

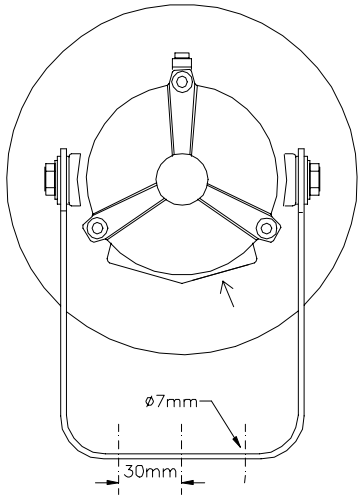

Transformer:
100 V line (optional 70V, 50V)

From speaker:
White to black
Primary nominal tappings:
1 : 2 15,0 W
1 : 3 10,0 W
1 : 4 7,5 W

From speaker:
White to white
Primary nominal tappings:
1 : 2 4,0 W
1 : 3 2,6 W
1 : 4 2,0 W

1 = Red, 2 = Yellow
3 = Green, 4 = Blue

Certified by / Certification code / Number: NEMKO / EEx de IIB+H_2 T5 / 98 ATEX 201
Certified by / Certification code / Number: NEMKO / EEx de IIC T5 / 98 ATEX 201

Ex II 2 G D

1W/1m sine wave smooth 1/3 octave IIB+H_2 version

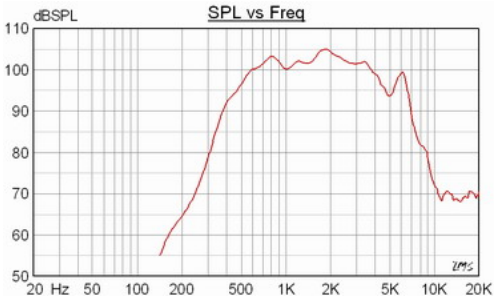

	IIB	IIC
Material / Color	Aluminum alloy / RAL7031	
Mounting	Bracket	
Termination	e-chamber, screw terminals	
Weight w/ transformer	2,8 kg	
IP-rating (UL equivalent)	67	
Max / min amb temp	60°C / -50°C	
Rated / max power	15 W / 15 W	
SPL 1W/1m	105 dB	101 dB
SPL rated power	116 dB	113 dB
Effective freq. range	410 – 7000 Hz	420-7000
Dispersion (-6dB) 1kHz / 4kHz	140° / 40°	105° / 35°
Options	Impedances, colors, labels	

Installation, Operation and Maintenance Procedures

- When mounting the loudspeaker please ensure that it is re-assembled in the same manner in which it was received. Fasten the bracket with 1-3 screws and ensure to use all washers in the intended position. (To isolate the main body from the bracket)
- To change the position of the loudspeaker, please adjust the bracket (by loosening / tightening the screws) as required.
- For optimum performance, always use the correct voltage / power and operate within the frequency limits as stated.
- Use only certified/specified cable glands and blanking plugs.
- Do not open loudspeaker when energized.
- The aluminum surface of the loudspeaker should be regularly treated with paint at the same interval as with other similar outdoor equipment.
- Fasten lid with a torque of 2 - 3 Nm to assure the IP rating.
- If the Ex-loudspeaker is to be earthed, it must be done correctly using the specially marked screws.
- This loudspeaker is supplied with a 2 year warranty against defective materials and workmanship.

(HS-15 EExmN(T) 60°C must be used with certified cable gland for temperatures up to 90°C)

CE

DNH reserves the right to alter specifications without notice.